Item description/product images

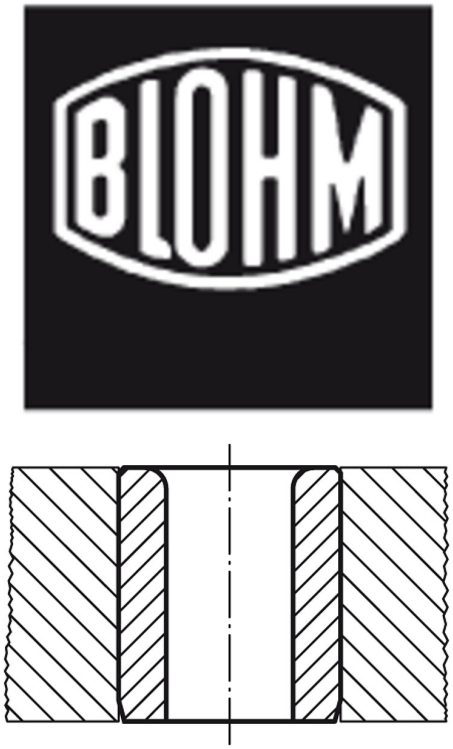

Description

Material:
Special hardened steel

Surface finish:
Hardened and ground.
Hardness 740 ±80 HV, quality class 10

Drawings

Form A
hole, rounded at one end

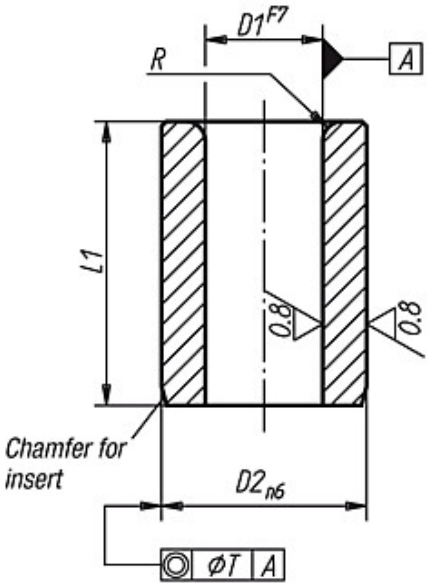

Form B
hole, rounded at both ends

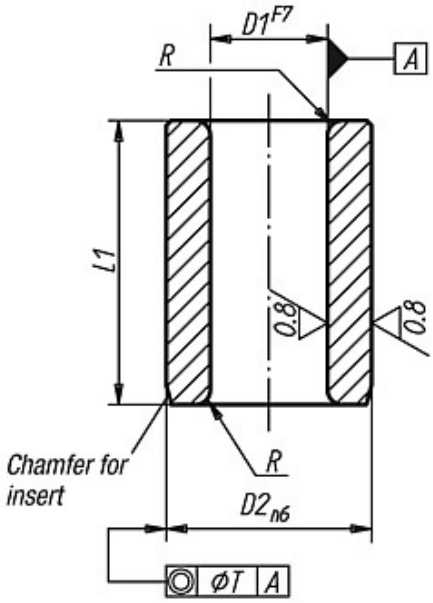

Form	D1	D2	L1	Surface finish	R	T
A	0,4/0,5/0,6/0,7/0,8/0,9/1	3	6/9	short/medium	1	0,01
A	1,1/1,2/1,3/1,4/1,5/1,6/1,7/1,8	4	6/9	short/medium	1	0,01
A	1,9/2/2,1/2,2/2,3/2,4/2,5/2,6	5	6/9	short/medium	1	0,01
A	2,7/2,8/2,9/3/3,1/3,2/3,3	6	8/12/16	short/ medium/long	1	0,01
A	3,4/3,5/3,6/3,7/3,8/3,9/4	7	8/12/16	short/ medium/long	1	0,01
A	4,1/4,2/4,3/4,4/4,5/4,6/4,7/4,8/4,9/5	8	8/12/16	short/ medium/long	1	0,01
A	5,1/5,2/5,3/5,4/5,5/5,6/5,7/5,8/5,9/6	10	10/16/20	short/ medium/long	1,5	0,02
A	6,1/6,2/6,3/6,4/6,5/6,6/6,7/6,8/6,9/7/7,1/7,2/7,3/7,4/7,5/7,6/7,7/7,8/7,9/8	12	10/16/20	short/ medium/long	1,5	0,02
A	8,1/8,2/8,3/8,4/8,5/8,6/8,7/8,8/8,9/9/9,1/9,2/9,3/9,4/9,5/9,6/9,7/9,8/9,9/10	15	12/20/25	short/ medium/long	2	0,02
A	10,1/10,2/10,3/10,4/10,5/10,6/10,7/10,8/10,9/11/11,1/11,2/11,3/11,4/11,5/11,6/11,7/11,8/11,9/12	18	12/20/25	short/ medium/long	2	0,02
A	12,1/12,2/12,3/12,4/12,5/12,6/12,7/12,8/12,9/13/13,1/13,2/13,3/13,4/13,5/13,6/13,7/13,8/13,9/14/14,1/14,2/14,3/14,4/14,5/14,6/14,7/14,8/14,9/15	22	16/28/36	short/ medium/long	2	0,02
A	15,5/16/16,5/17/17,5/18	26	16/28/36	short/ medium/long	2	0,02
A	18,5/19/19,5/20/20,5/21/21,5/22	30	20/36/45	short/ medium/long	3	0,04
A	22,5/23/23,5/24/24,5/25/25,5/26	35	20/36/45	short/ medium/long	3	0,04
A	26,5/27/27,5/28/28,5/29/29,5/30	42	25/45/56	short/ medium/long	3	0,04
A	30,5/31/31,5/32/32,5/33/33,5/34/34,5/35	48	25/45/56	short/ medium/long	3	0,04
A	35,5/36/36,5/37/37,5/38/38,5/39/39,5/40/40,5/41/41,5/42	55	30/56/67	short/ medium/long	3,5	0,04
A	42,5/43/43,5/44/44,5/45/45,5/46/46,5/47/47,5/48	62	30/56/67	short/ medium/long	3,5	0,04

Form	D1	D2	L1	Surface finish	R	T
B	0,4/0,5/0,6/0,7/0,8/0,9/1	3	6/9	short/medium	1	0,01
B	1,1/1,2/1,3/1,4/1,5/1,6/1,7/1,8	4	6/9	short/medium	1	0,01

Form	D1	D2	L1	Surface finish	R	T
B	1,9/2/2,1/2,2/2,3/2,4/2,5/2,6	5	6/9	short/medium	1	0,01
B	2,7/2,8/2,9/3/3,1/3,2/3,3	6	8/12/16	short/ medium/long	1	0,01
B	3,4/3,5/3,6/3,7/3,8/3,9/4	7	8/12/16	short/ medium/long	1	0,01
B	4,1/4,2/4,3/4,4/4,5/4,6/4,7/4,8/4,9/5	8	8/12/16	short/ medium/long	1	0,01
B	5,1/5,2/5,3/5,4/5,5/5,6/5,7/5,8/5,9/6	10	10/16/20	short/ medium/long	1,5	0,02
B	6,1/6,2/6,3/6,4/6,5/6,6/6,7/6,8/6,9/7/7,1/7,2/7,3/7,4/7,5/7,6/7,7/7,8/7,9/8	12	10/16/20	short/ medium/long	1,5	0,02
B	8,1/8,2/8,3/8,4/8,5/8,6/8,7/8,8/8,9/9/9,1/9,2/9,3/9,4/9,5/9,6/9,7/9,8/9,9/10	15	12/20/25	short/ medium/long	2	0,02
B	10,1/10,2/10,3/10,4/10,5/10,6/10,7/10,8/10,9/11/11,1/11,2/11,3/11,4/11,5/11,6/11,7/11,8/11,9/12	18	12/20/25	short/ medium/long	2	0,02
B	12,1/12,2/12,3/12,4/12,5/12,6/12,7/12,8/12,9/13/13,1/13,2/13,3/13,4/13,5/13,6/13,7/13,8/13,9/14/14,1/14,2/14,3/14,4/14,5/14,6/14,7/14,8/14,9/15	22	16/28/36	short/ medium/long	2	0,02
B	15,5/16/16,5/17/17,5/18	26	16/28/36	short/ medium/long	2	0,02
B	18,5/19/19,5/20/20,5/21/21,5/22	30	20/36/45	short/ medium/long	3	0,04
B	22,5/23/23,5/24/24,5/25/25,5/26	35	20/36/45	short/ medium/long	3	0,04
B	26,5/27/27,5/28/28,5/29/29,5/30	42	25/45/56	short/ medium/long	3	0,04
B	30,5/31/31,5/32/32,5/33/33,5/34/34,5/35	48	25/45/56	short/ medium/long	3	0,04
B	35,5/36/36,5/37/37,5/38/38,5/39/39,5/40/40,5/41/41,5/42	55	30/56/67	short/ medium/long	3,5	0,04
B	42,5/43/43,5/44/44,5/45/45,5/46/46,5/47/47,5/48	62	30/56/67	short/ medium/long	3,5	0,04