novotechnik
Siedle Group

Precision Sensor, non-contacting

Series FTI 10

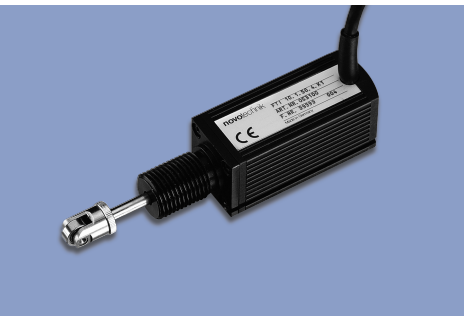

Special features

- long service to non contact measuring system
- high precision with linearity of up to 0.2 %, 0.1 % on request
- reliable signal transmission through standardized current output
- robust due to completely encapsulated housing
- temperature-resistant precision due to supplementary regulating winding
- complete electrical interchangeability

The inductive precision sensor FTI is used to transform short linear travel paths into analogue electrical signals using a differential transformer with a movable core.

The core is located on a gauging pin which is pressed against the measured object by an integrated spring. The sensor is supplied with direct voltage from which an integrated oscillator generates an alternating voltage to feed the differential transformer.
The secondary transformer voltages are rectified in a built-in demodulator. The oscillator and demodulator are designed using hybrid technology. The output current is strictly proportional to the displacement of the core and therefore to the measured path.

Standardized output signals and absolute linearity up to 0.2 % (on request up to 0.1 %) guarantee a highly accurate measurement value and complete electrical interchangeability.

The precision sensor is available in protection class IP50, optionally IP67, and due to its completely encapsulated housing and temperature-compensating properties of its control-loop coil, it can be used under rough environmental operating conditions.

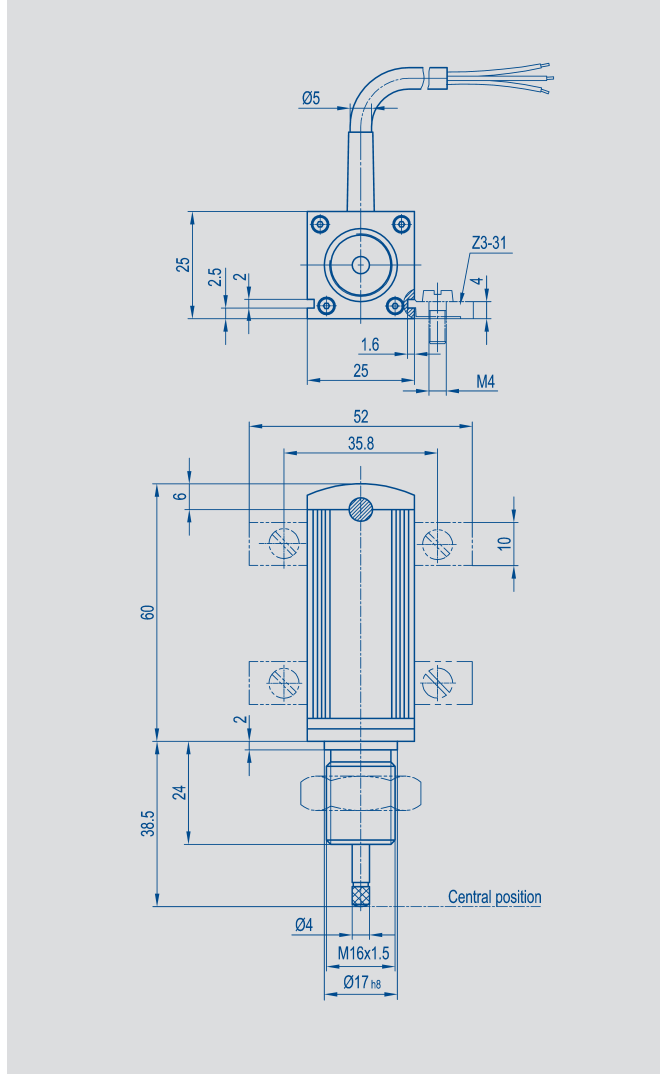

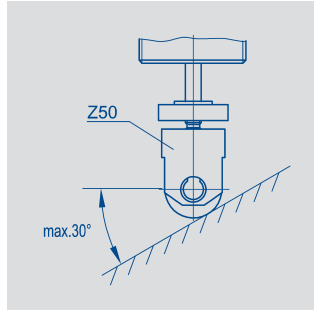

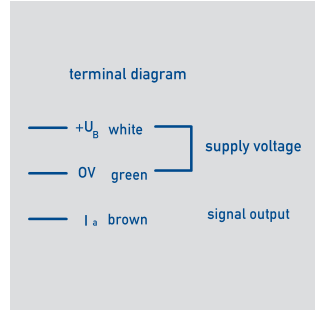

Novotechnik
Messwertaufnehmer OHG

Postfach 4220
73745 Ostfildern (Ruit)
Horbstraße 12
73760 Ostfildern (Ruit)

Tel. +49 711 44 89-0
Fax +49 711 44 89-150
info@novotechnik.de
www.novotechnik.de

Art.-Nr.: 062 753
Subject to changes
Printed in Germany

Description	
Dimensions	see drawing
Housing	anodized aluminium
Plunger	stainless antimagnetic steel. Is pressed into its end position by a compression spring. Plunger with antirotation element.
Gauging head	stainless steel with external thread M 2.5 and hardened ball pint
Bearing	maintenance-free plastic bearing
Fixture	by means of centering collar with M 16 x 1.5 thread or using a clamping nut with clamping brackets
Connection	flexible shielded 3core cable appr. 2 meter long (other lengths on request) leading out through cable gland on one side
Electronic circuitry	encapsulated hybrid circuit
Reverse polarity protection	by means of an internal diode

Mechanical data		
Mechanical range	12	mm
Required measuring force a) with IP 50 (standard) b) with IP 67 (option)	 4 10	 N N
Permissible tightening torque at the clamping flange	25	Nm
Total weight (excluding cable)	90	g
Electrical data		
Electrically defined measurement range	10 (symmetrically within the mech. range)	mm
Absolute linearity (related to the electrical centre)	± 0.2 ± 0.4 ± 0.1 on request	% % %
Operating voltage	18…30	VDC
Signal output a) standard b) Option	 4…20 (electrical centre at 12 mA) 0…20 (electrical centre at 10 mA)	 mA mA
Max. current consumption	50	mA
Load impedance	0-500	Ω
Temperature coefficient of centre range of sensitivity	 < 80 < 80	 ppm/K ppm/K
Dielectric strength (50 Hz, 2 s, 1 bar, 500 VAC)	≤100	µA
Max. permissible voltage between the output terminals and housing	100	VDC

Environmental data		
Temperature range	-25...+70	°C
Frequency of operation	max. 10 Hz at 10 mm measuring stroke	
Shock	50 11	g ms
Mechanical life (restricted by oblique application)	100×10^6	movem.
Protection class	Standard IP 50, Option IP 67 (DIN 400 50 / IEC 529)	

Included in delivery

1 hexagon nut
M 16 x 1,5 ISO 8675
1 lock washer
J 16,5 DIN 6797

Recommended accessories

4 fixing clamps Z3-31,
Gauge roller Z 50

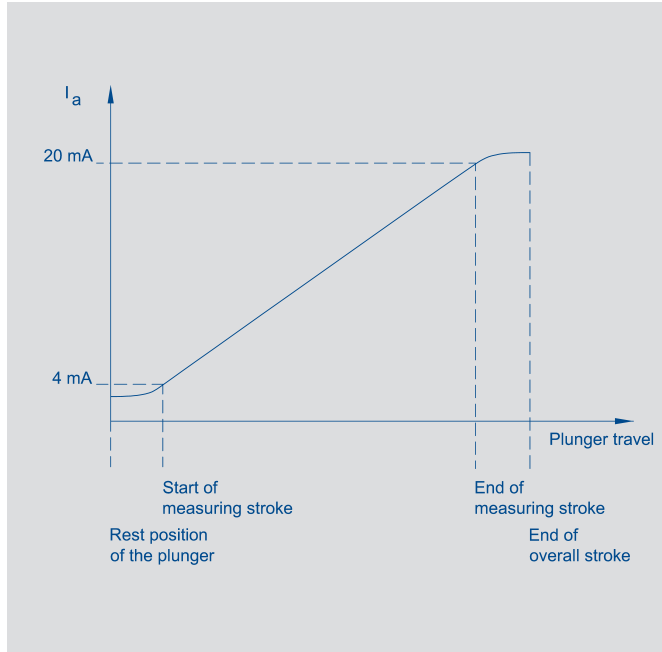

Order designations

Type	Linearity in ± %	Protection class	Current otput in mA	Art.-No.
FTI 10.1.50.4.K1	0,1	IP 50	4...20	053101
FTI 10.1.67.4.K1	0,1	IP 67	4...20	053103
FTI 10.1.50.0.K1	0,1	IP 50	0...20	053105
FTI 10.1.67.0.K1	0,1	IP 67	0...20	053107
FTI 10.2.50.4.K1	0,2	IP 50	4...20	053100
FTI 10.2.67.4.K1	0,2	IP 67	4...20	053102
FTI 10.2.50.0.K1	0,2	IP 50	0...20	053104
FTI 10.2.67.0.K1	0,2	IP 67	0...20	053106
FTI 10.4.50.4.K1	0,4	IP 50	4...20	053110
FTI 10.4.67.4.K1	0,4	IP 67	4...20	053112
FTI 10.4.50.0.K1	0,4	IP 50	0...20	053114
FTI 10.4.67.0.K1	0,4	IP 67	0...20	053116